HUNTLY

PTL3727-BRZ/CIB

TROY LIGHTING

Inspired by outdoor stone relics that evolve both physically and symbolically over time, the Huntly lamp taps into an ancient vernacular while staying grounded in its refined, polished form. The concave cut-outs on the front and back create an evocative relief reminiscent of surfaces worn smooth by flowing water. Sculpted from matte ceramic with an overscale natural linen shade, this lamp serves as a conversation piece in any space. Part of our Chandler McLellan collection.

*Due to the one-of-a-kind nature of the medium, exact colors and patterns may vary slightly from the image shown.

FINISHES

BRONZE w/ Ceramic Ivory Breakstone

DIMENSIONS / SPECS

Height: 26.5"
Width/Diameter: 20"
Length: 15"
Canopy/Backplate: 5"
Product Weight: 12.1lb
Canopy/Backplate Shape: Oval
Sloped Ceiling Compatible: No
Living Finish: No
Uplight Only: No

Shade 1: Textile
Shade 1 Finish: Natural Linen
Shade 1 Top Length: 14.25"
Shade 1 Top Width: 19.25"
Shade 1 Bottom L/W: 15" / 20"
Shade 1 Height: 10"

ELECTRICAL

Bulb 1
Bulb Included: No
Socket: E26 Medium Base
Bulb Type: A19
Max Wattage: 15
Bulb Quantity: 1
Cord Type: SPT-2 BROWN FABRIC
Switch Type: ON/OFF SWITCH ON SOCKET
Gem Box Required (2"x3"): No
Dark Sky: No
Convertible: No

Voltage:
UL Rating: cUL Dry

SHIPPING

Carton 1: 24" x 20" x 27"
Carton 1 Weight: 24lb
Shipping Method: Ground
Country of Origin: PH



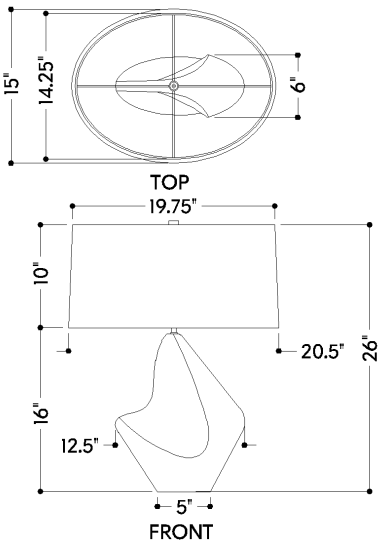

HUDSON VALLEY
LIGHTING GROUP