TOBY

B6623-PBR/GRA

TROY LIGHTING

Inspired by a Cape Cod post lantern, this updated heritage sconce blends classic design features with contemporary mixed metal finishes. The Graphite frame is complemented by warm Patina Brass details, including the loop that suspends the fixture. A single cream candle lends a sense of nostalgia, welcoming you home on a dark night. Available in two sizes, Toby is particularly well-suited to coastal and cottage homes.

FINISHES

PATINA BRASS w/ GRAPHITE
Coastal Suitable Finish (EPM): No

DIMENSIONS / SPECS

Height: 23"
Width/Diameter: 9.75"
Canopy/Backplate: 6.75"
Product Weight: 10.8lb
Extension: 11.75"
Top to Center: 7"
Canopy/Backplate Shape: Rectangle
Sloped Ceiling Compatible: No
Living Finish: No
Uplight Only: Yes

Shade 1: Glass
Shade 1 Finish: Clear
Shade 1 Top Length: 12.5"
Shade 1 Top Width: 7.5"

ELECTRICAL

Bulb 1
Bulb Included: No
Socket: E12 Candelabra Base
Bulb Type: B11
Max Wattage: 10
Bulb Quantity: 1
Wire Length: 7"
Cord Type: B & W TEFLON W/ GROUND WIRE
Gem Box Required (2"x3"): No
Dark Sky: No
Convertible: No

Voltage:
UL Rating: cETL Wet
Gem Box: Not Required

SHIPPING

Carton 1: 27" x 15" x 13"
Carton 1 Weight: 15lb
Shipping Method: Ground
Country of Origin: VN



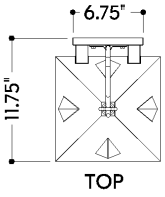

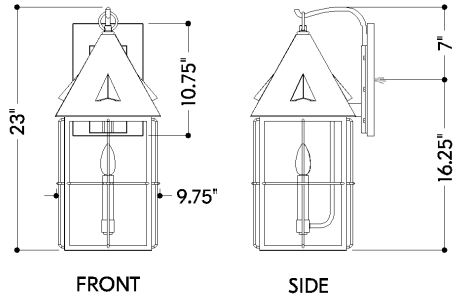

HUDSON VALLEY
LIGHTING GROUP