SELDON

B2420-VGL

TROY LIGHTING

The Seldon sconce brings a rich materiality to the wall through layers of natural woven Saguran fiber. Two folded shades overlap in this minimalist composition, their curled, leaf-like edges lending the fixture an organic softness. As light filters warmly through the weave and escapes from both ends, it emphasizes the texture and casts an inviting glow around a room.

*Due to the one-of-a-kind nature of the medium, exact colors and patterns may vary slightly from the image shown.

FINISHES

VINTAGE GOLD LEAF

DIMENSIONS / SPECS

Height: 19.5"
Width/Diameter: 6"
Canopy/Backplate: 4.5"
Product Weight: 2.2lb
Extension: 3.75"
Top to Center: 9.75"
Canopy/Backplate Shape: Rectangle
Sloped Ceiling Compatible: No
Living Finish: No
Uplight Only: No

Shade 1: Natural Woven
Shade 1 Finish: Saguran
Shade 1 Top Width: 4.5"
Shade 1 Height: 19.5"
Shade 2: Natural Woven
Shade 2 Finish: Saguran
Shade 2 Top Length: 3"
Shade 2 Top Width: 6"
Shade 2 Height: 16"

ELECTRICAL

Bulb 1
Bulb Included: N/A
Socket: Integrated LED
Bulb Type: LED
Max Wattage: 12
Bulb Quantity: 1
Wire Length: 7"
Cord Type: B & W TEFLON W/ GROUND WIRE
Dimmer Type: ELV, TRIAC
Gem Box Required (2"x3"): No
Dark Sky: No
Convertible: No
CRI: 90
Color Temp.: 2700k
Lumens: 325
Title 24: No
Field Serviceable: No
Voltage: 120V

Voltage:
UL Rating: cETL Damp
Gem Box: Not Required



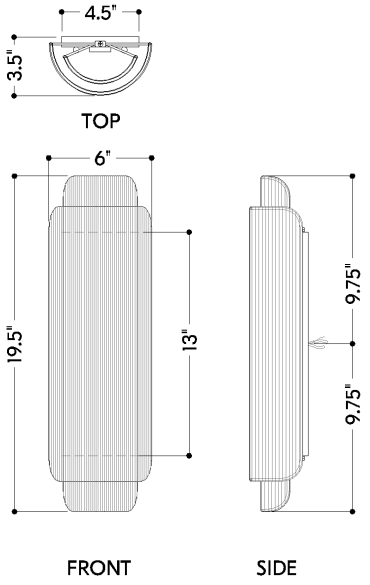

HUDSON VALLEY
LIGHTING GROUP

SELDON

B2420-VGL

TROY LIGHTING

SHIPPING

Carton 1: 24" x 10" x 8"
Carton 1 Weight: 5lb
Shipping Method: Ground
Country of Origin: PH