KING

CBL5128-AGB/CCN

HUDSON VALLEY LIGHTING

The architectural form and artisanal materiality of the King table lamp engage in a quiet dialogue between lightness and pattern. The Cocoon Ceramic base is accented by symmetrical ridges that add depth and tonal variation. A textured linen shade tops the lamp with even more earth-toned comfort while the Aged Brass hardware adds a glimmer of metal at the neck. King sits proudly in living rooms, studies, or bedrooms, providing a sculptural and grounded ambiance.

*Due to the one-of-a-kind nature of the medium, exact colors and patterns may vary slightly from the image shown.
*Lamp includes its standard shade. Personalize the look with an optional shade add-on, sold separately. An 8.5" harp is required to use an add-on shade with this lamp.

FINISHES

AGED BRASS w/ Ceramic Cocoon



DIMENSIONS / SPECS

Height: 28.25"
Width/Diameter: 15.75"
Canopy/Backplate: 7.5"
Product Weight: 11.02lb
Canopy/Backplate Shape: Round
Sloped Ceiling Compatible: No
Living Finish: No
Uplight Only: No

Shade 1: Textile
Shade 1 Finish: Textured Linen
Shade 1 Top Width: 7"
Shade 1 Bottom L/W: 0" / 15.75"
Shade 1 Height: 14.75"

ELECTRICAL

Bulb 1
Bulb Included: No
Socket: E26 Medium Base
Bulb Type: A19
Max Wattage: 15
Bulb Quantity: 1
Wire Length: 96"
Cord Type: SPT-2 BEIGE FABRIC
Switch Type: FULL RANGE DIMMER ON SOCKET
Gem Box Required (2"x3"): No
Dark Sky: No
Convertible: No

Voltage:
UL Rating: cUL Dry

SHIPPING

Carton 1: 18" x 18" x 31"
Carton 1 Weight: 21lb
Shipping Method: Ground
Country of Origin: VN

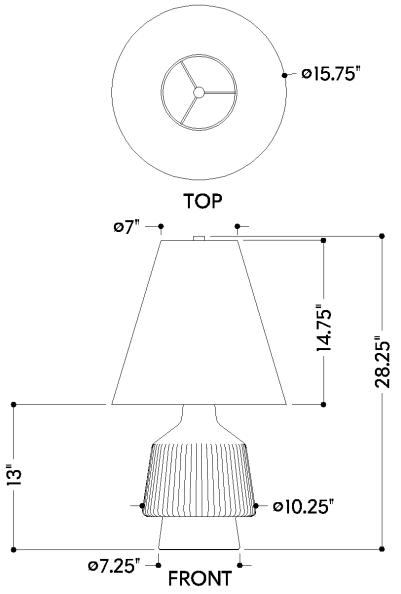
ø15.75"
TOP
ø7"
14.75"
28.25"
13"
ø10.25"
ø7.25"
FRONT